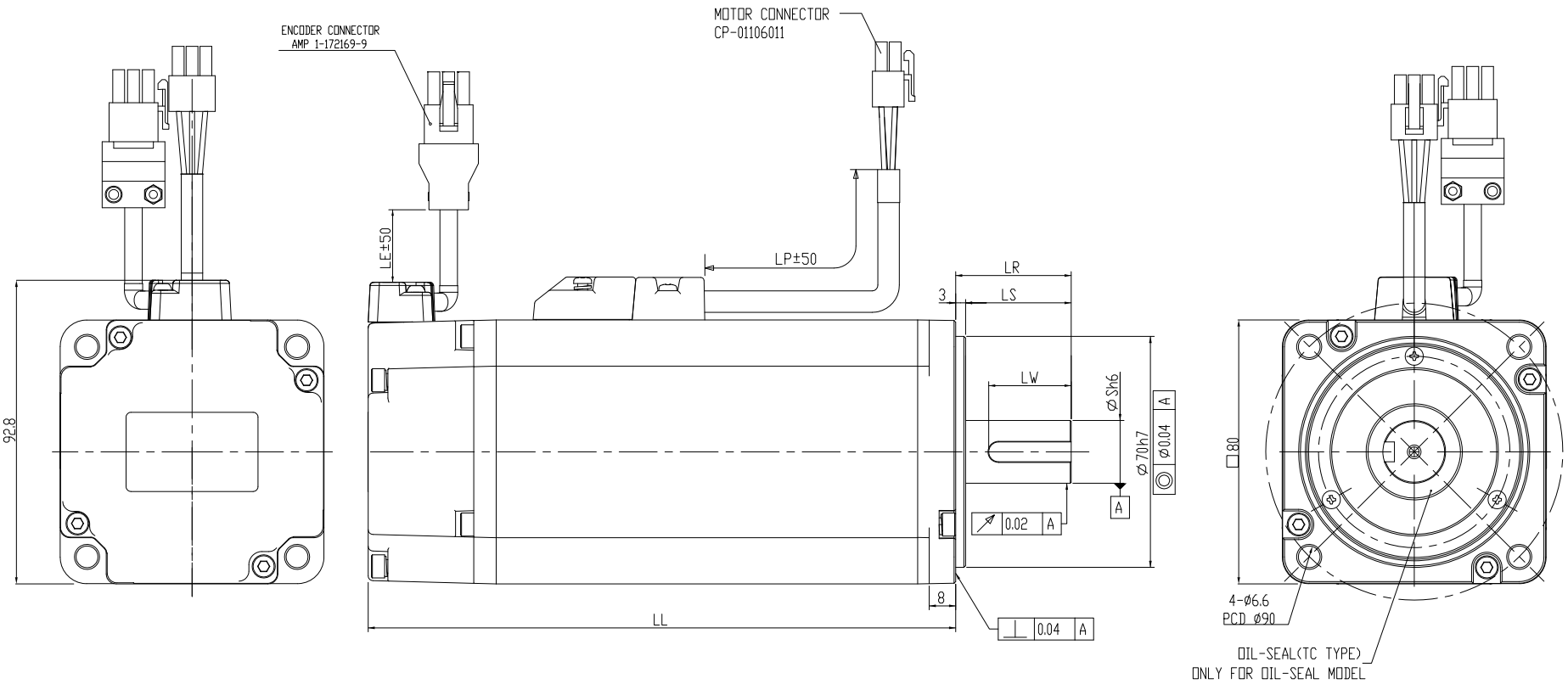

DIMENSION TABLE (MODEL WITH BRAKE)

MODEL	LL	LR	LS	S	LW	WK	W	T	RH	TP	LP	LE
ECMA-J10807S6	178.0	40	37	16	32.5	5	5	5	13	M5, Depth 15	300	300

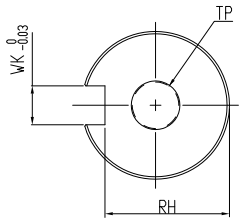

SHAFT END DETAILS

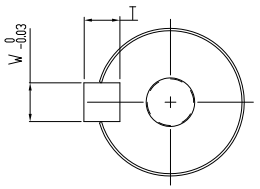

KEY DETAILS

REV.	ECN NO.

台達電子工業股份有限公司
DELTA ELECTRONICS, INC.

DRAWN: | DESIGN:
APPROVE: | DATE: 12/02/2014

THESE DRAWINGS AND SPECIFICATIONS ARE THE PROPERTY OF DELTA ELECTRONICS, INC. AND SHALL NOT BE REPRODUCED OR USED AS THE BASIS FOE THE MANUFACTURE OR SELL OF APPARATUSES OR DEVICES WITHOUT PERMISSION.

DIMENSIONAL TOLERANCES

	( )	( )	( )	( )	ANGLES
DECIMALS	<50 ±0.1	<50 ±0.15	<50 ±0.2	<30° ±0.1°	
X ±0.3	>50~100 ±0.15	>50~100 ±0.2	>50~100 ±0.25	>30°~60° ±0.3°	
X.X ±0.2	>100~200 ±0.2	>100~200 ±0.25	>100~200 ±0.3	>60°~90° ±0.5°	
X.XX ±0.1	>200~ ±0.2%	>200~ ±0.25%	>200~ ±0.3%		

DESCRIPTION: CONFIDENTIAL
ECMA-J10807S6

A3 SIZE | THIRD ANGLE PROJECTION | PART NO.: | REV. 00

USED ON | UNIT mm | SCALE | SHEET 1 OF1

FRAME NAME: DF-MEA3H-3R02.DWG