| REV. | ECN NO. |
|---|---|
| | |

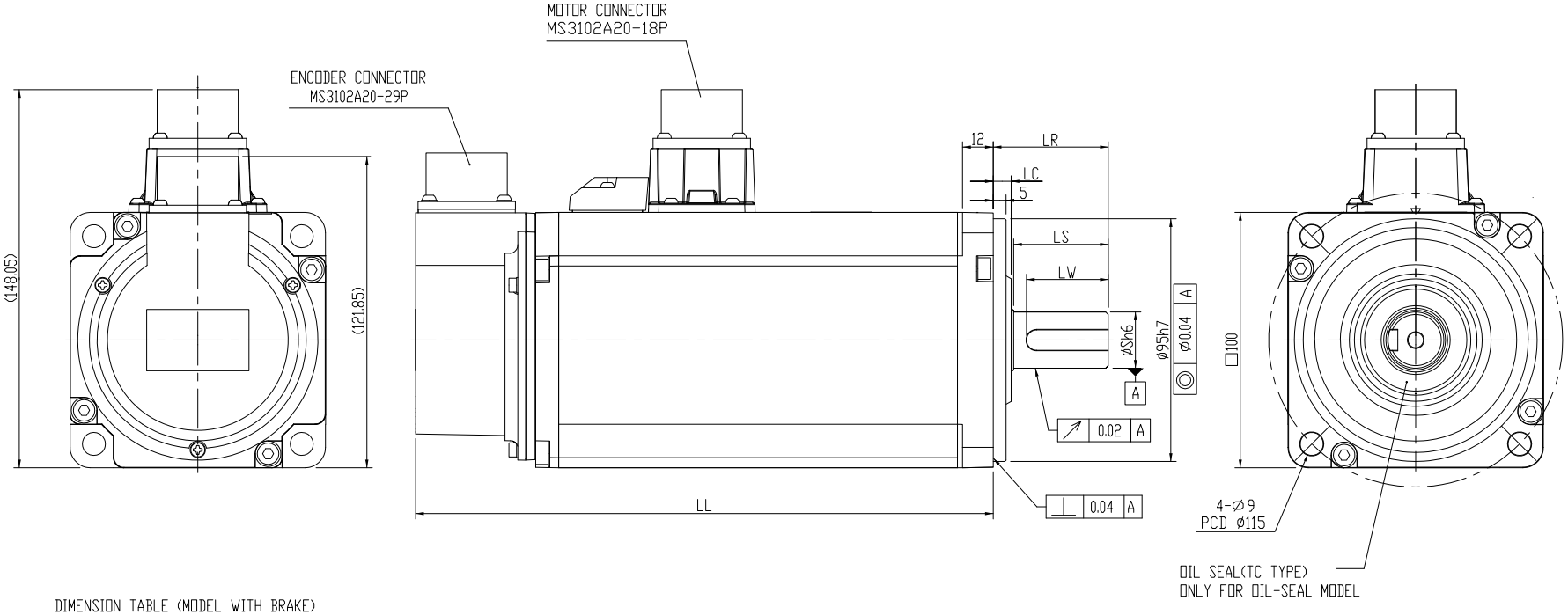


DIMENSION TABLE (MODEL WITH BRAKE)

| MODEL | LL | LR | LS | LC | S | LW | WK | W | T | RH | TP |
|---|---|---|---|---|---|---|---|---|---|---|---|
| ECMA-J11020S4 | 226 | 45 | 37.0 | 7 | 24 | 32 | 8 | 8 | 7 | 18 | M6, Depth 20 |

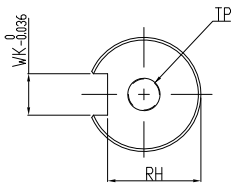


SHAFT END DETAILS

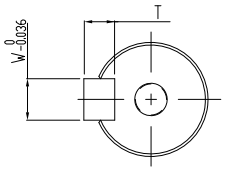


KEY DETAILS

台達電子工業股份有限公司
DELTA ELECTRONICS, INC.

DRAWN: | DESIGN:
APPROVE: | DATE: 12/08/2014

THESE DRAWINGS AND SPECIFICATIONS ARE THE PROPERTY OF DELTA ELECTRONICS, INC. AND SHALL NOT BE REPRODUCED OR USED AS THE BASIS FOE THE MANUFACTURE OR SELL OF APPARATUSES OR DEVICES WITHOUT PERMISSION.

DIMENSIONAL TOLERANCES

| ( ) | ( ) | ( ) | ( ) | ANGLES |
|---|---|---|---|---|
| DECIMALS | <50 ±0.1 | <50 ±0.15 | <50 ±0.2 | <30° ±0.1° |
| X ±0.3 | >50~100 ±0.15 | >50~100 ±0.2 | >50~100 ±0.25 | >30°~60° ±0.3° |
| X.X ±0.2 | >100~200 ±0.2 | >100~200 ±0.25 | >100~200 ±0.3 | >60°~90° ±0.5° |
| X.XX ±0.1 | >200~ ±0.2% | >200~ ±0.25% | >200~ ±0.3% | |

DESCRIPTION: CONFIDENTIAL
ECMA-J11020S4

A3 SIZE | THIRD ANGLE PROJECTION | PART NO.: | REV. 00

USED ON | UNIT mm | SCALE | SHEET 1 OF1

FRAME NAME: DF-MEA3H-3R02.DWG